REV	ZONE	DESCRIPTION	ECN NO.	ENG	APPROVED	DATE

士誼科技股份有限公司
文件
2026.11.13
發行章
文件管制中

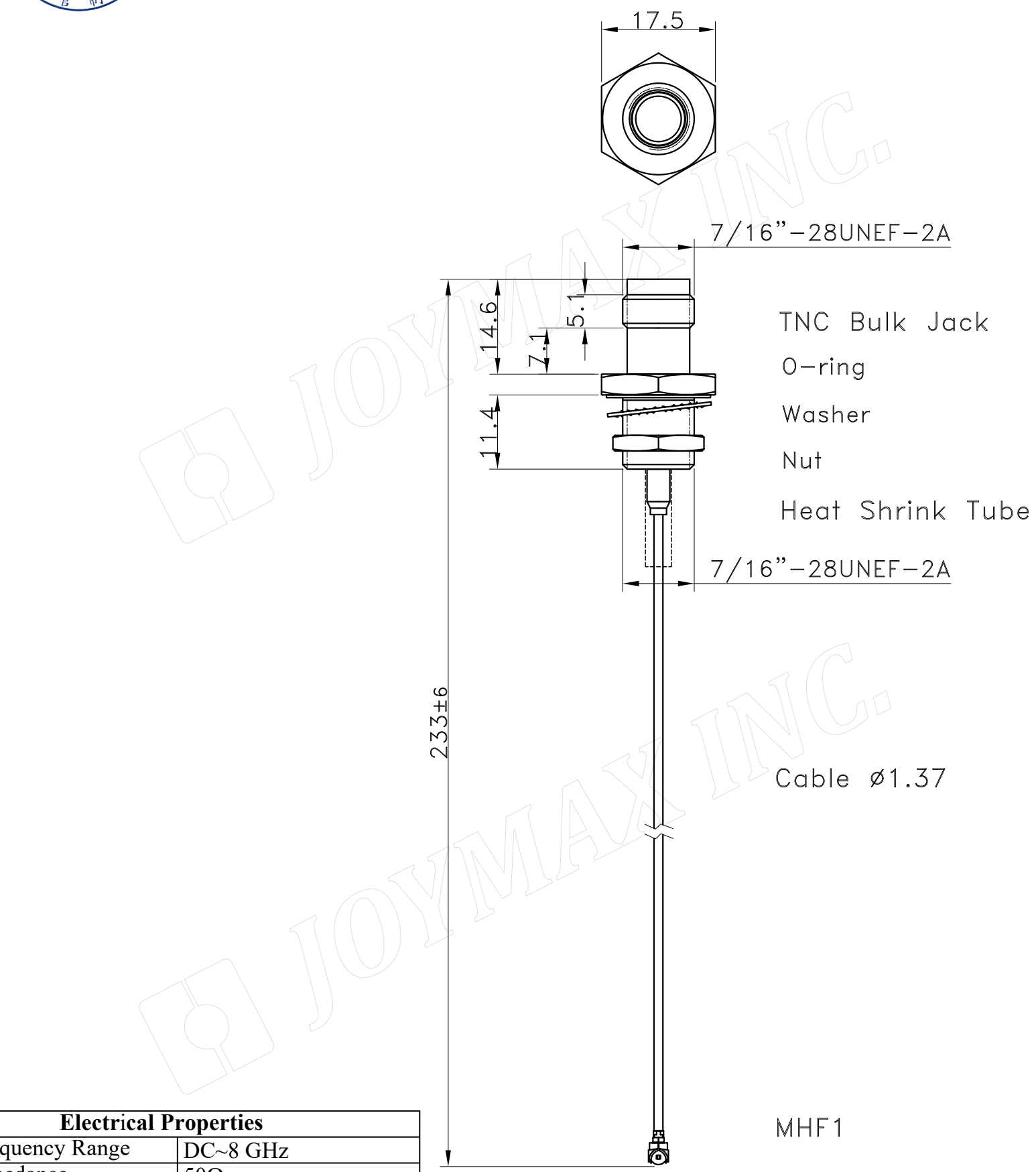

JOYMAX INC.

Electrical Properties	
Frequency Range	DC~8 GHz
Impedance	50Ω
V.S.W.R.	≤2.5
Mechanical Properties	
Weight	18.88g (est)
Operating Temp	−40℃～+85℃

UNLESS OTHERWISE SPECFIED TOLERANCES ON:
X ± 1
X.X ± 0.5
X.XX ± 0.25
ANG. ± 2.0°

THIRD ANGLE PROJECTION

DRAWN BY: Ya
DESIGNED BY:
CHECKED BY: KYLIU
APPOVED BY: SARA

MATERIAL:
FINISH:
SCALE:1/1;UNIT:mm
DATE: 2026/11/5
REV: A

TITLE : Cable Assembly
DRAW NO. : SSP-260220-01
PART NO. : CX-TCS0MPA1H0022

JOYMAX INC.

THIS DRAWING CONTAINS INFORMATION THAT IS PROPRIETARY TO JOYMAX AND SHOULD NOT BE USED WITHOUT WRITTEN PERMISSION.